DFI PT630-NRM ATX

Q57

Desktop

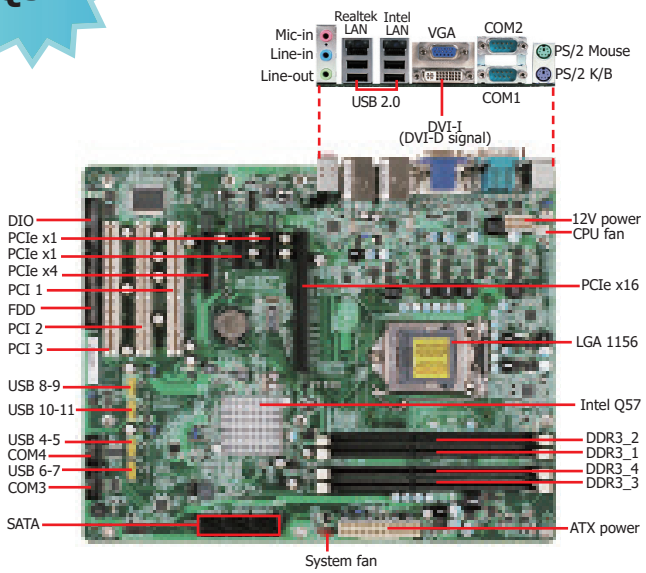

E131107

Features

CHIPSET	**Intel® Q57 PCH**
CPU	**Intel® Core™ i7/i5/i3** **Intel® Pentium®**
MEMORY	**4 DDR3 DIMM up to 16GB**
EXPANSION	**1 PCIe x16, 1 PCIe x4, 2 PCIe x1** **3 PCI**
DISPLAY OUTPUTS	**1 DVI-I (DVI-D signal), 1 VGA**
LAN	**2 Gigabit LAN ports**
COM	**4 COM**
USB	**12 USB 2.0**
STORAGE	**6 SATA 2.0** **1 FDD**
DIO	**8-bit DIO**

Mechanical Drawing

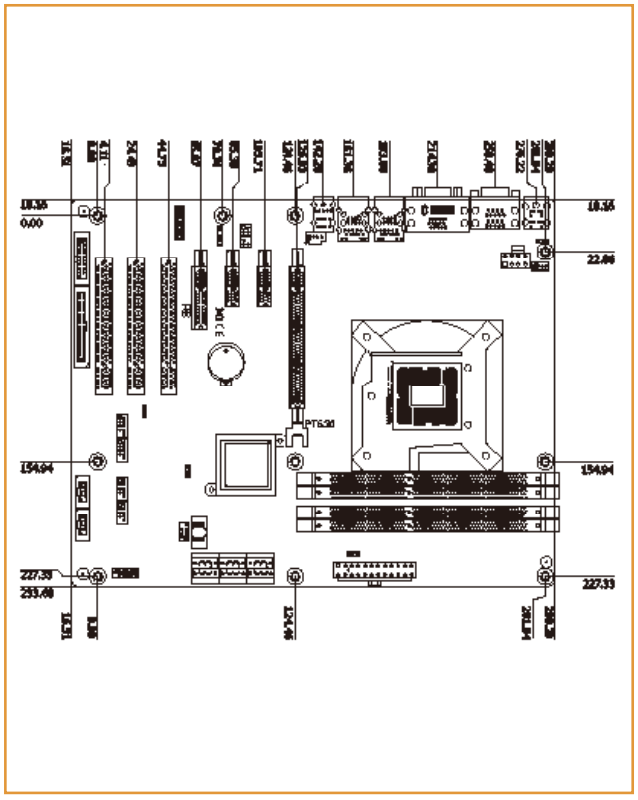

Block Diagram

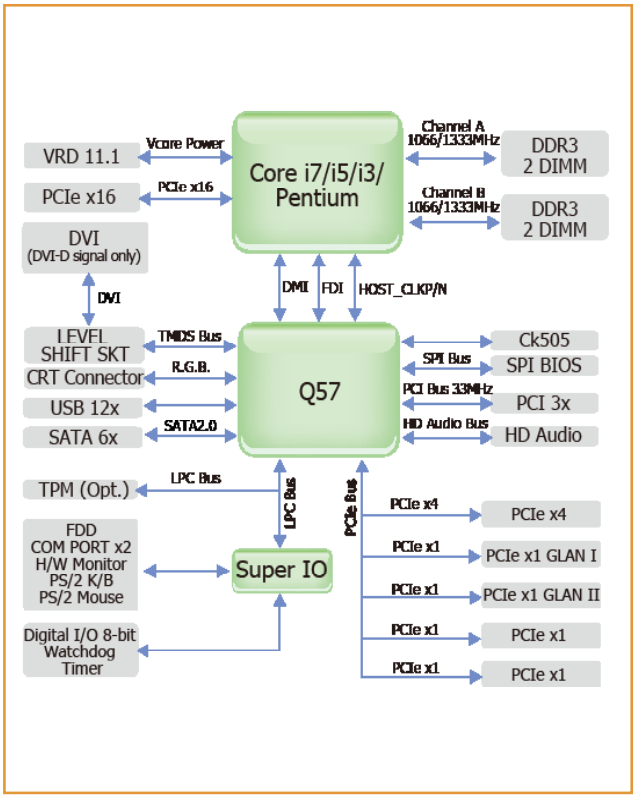

PT630-NRM ATX

Specifications

PROCESSOR
- LGA 1156 socket for:
  - Intel® Core™ i7-860 2.80GHz/8M
  - Intel® Core™ i5-750 2.66GHz/8M
  - Intel® Core™ i5-660 3.33GHz/4M
  - Intel® Core™ i3-540 3.06GHz/4M
  - Intel® Pentium® G6950 2.80GHz/3M

CHIPSET
- Intel® Q57 PCH (Platform Controller Hub)

SYSTEM MEMORY
- Four 240-pin DDR3 DIMM sockets
- Supports DDR3 1066/1333MHz
- Supports maximum memory bandwidth of 21GB/s in dual-channel mode when using DDR3 1333MHz
- Supports dual channel memory interface
- Supports up to 16GB system memory

EXPANSION SLOTS
- 1 PCI Express x16 slot (PCIe 2.0)
- 1 PCI Express x4 slot (PCIe 1.0)
- 2 PCI Express x1 slots (PCIe 1.0)
- 3 PCI slots (PCI 2.3)

ONBOARD GRAPHICS FEATURES
- Intel® HD Graphics
- VGA display resolution up to 2048x1536
- Supports 3D, 2D and video capabilities

  Note: Both Intel® Core™ i7-860 and Core™ i5-750 CPUs does not support integrated graphics.

ONBOARD AUDIO FEATURES
- Realtek ALC262 2-channel High Definition Audio
- Two 24-bit stereo DACs and three 20-bit stereo ADCs
- S/PDIF audio interface

ONBOARD LAN FEATURES
- One Realtek RTL8111DL PCI Express Gigabit Ethernet controller
- One Intel® W82578DM with iAMT6.0 Gigabit Ethernet PHY
- Supports 10Mbps, 100Mbps and 1Gbps data transmission
- IEEE 802.3 (10/100Mbps) and IEEE 802.3ab (1Gbps) compliant

SERIAL ATA (SATA) INTERFACE
- 6 Serial ATA ports compliant with SATA 1.0 specification
- SATA speed up to 3Gb/s (SATA 2.0)
- Supports RAID 0/1/5/10

INTEL ACTIVE MANAGEMENT TECHNOLOGY (AMT)
- Supports iAMT6.0
- Out-of-band system access
- Remote troubleshooting and recovery
- Hardware-based agent presence checking
- Proactive alerting
- Remote hardware and software asset tracking

TRUSTED PLATFORM MODULE (TPM) - optional
- Provides a Trusted PC for secure transactions
- Provides software license protection, enforcement and password protection

REAR PANEL I/O PORTS
- 1 mini-DIN-6 PS/2 mouse port
- 1 mini-DIN-6 PS/2 keyboard port
- 2 DB-9 RS232 serial ports
- 1 DB-15 VGA port
- 1 DVI-I port (DVI-D signal)
- 2 RJ45 LAN ports
- 4 USB ports
- Mic-in, line-in and line-out jacks

I/O CONNECTORS
- 4 connectors for 8 external USB 2.0 ports
- 2 connectors for 2 external COM ports
  - COM4 supports RS232/485
- 1 8-bit Digital I/O connector
- 1 front audio connector for line-out and mic-in jacks
- 1 CD-in connector
- 1 S/PDIF connector
- 6 Serial ATA ports
- 1 FDD connector
- 1 24-pin ATX power connector
- 1 8-pin 12V power connector
- 1 chassis intrusion connector
- 1 front panel connector
- 2 fan connectors

BIOS
- AMI BIOS
  - 64Mbit SPI BIOS

ENERGY EFFICIENT DESIGN
- ACPI 3.0 specification
- Wake-On-Events include:
  - Wake-On-PS/2 Keyboard/Mouse
  - Wake-On-USB Keyboard/Mouse
  - Wake-On-LAN
- Enhanced Intel® SpeedStep Technology
- Dynamic FSB frequency switching

DAMAGE FREE INTELLIGENCE
- Monitors CPU/system temperature and overheat alarm
- Monitors VCORE/+5V/+12V/SM/+3.3V/VBAT voltages and failure alarm
- Monitors CPU/system fan speed and failure alarm
- Read back capability that displays temperature, voltage and fan speed
- Watchdog timer function

POWER CONSUMPTION
- 64.45 W with i7-860 at 2.80GHz and 2x 1GB DDR3 DIMM

TEMPERATURE
- Operating: 0°C to 60°C
- Storage: -20°C to 85°C

HUMIDITY
- 10% to 90%

DIMENSIONS
- ATX form factor
- 305mm (12") x 244mm (9.6")

CERTIFICATION
- CE
- FCC Class B
- UL
- RoHS

Packing List

- 1 PT630-NRM motherboard
- 2 Serial ATA data cables
- 2 Serial ATA power cables
- 2 USB cables
- 1 COM port cable (with bracket)
- 1 I/O shield

Optional Items

- USB port cable
- COM port cable
- Serial ATA data cable
- Serial ATA power cable
- I/O shield